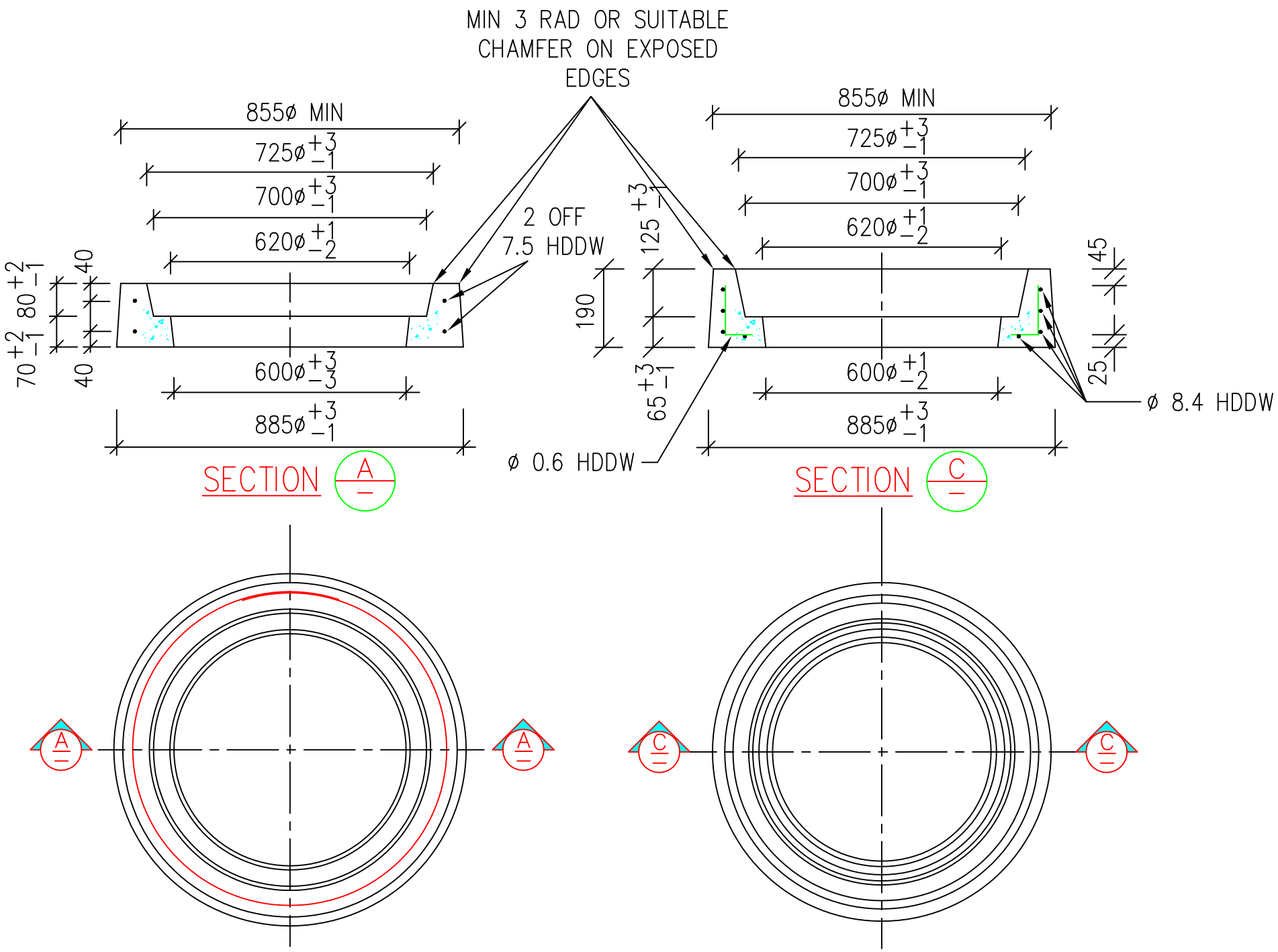

SNOWY RIVER SHIRE COUNCIL			SEWER RETRICULATION MANHOLE COVERS					
Surveyed By	Drawn By	Scale	Approved By	Date	Datum	Sheet No	Ref. No	Plan No
Job No	Checked By	N.T.S.				2of2		SD31b
Disk No	Passed By							