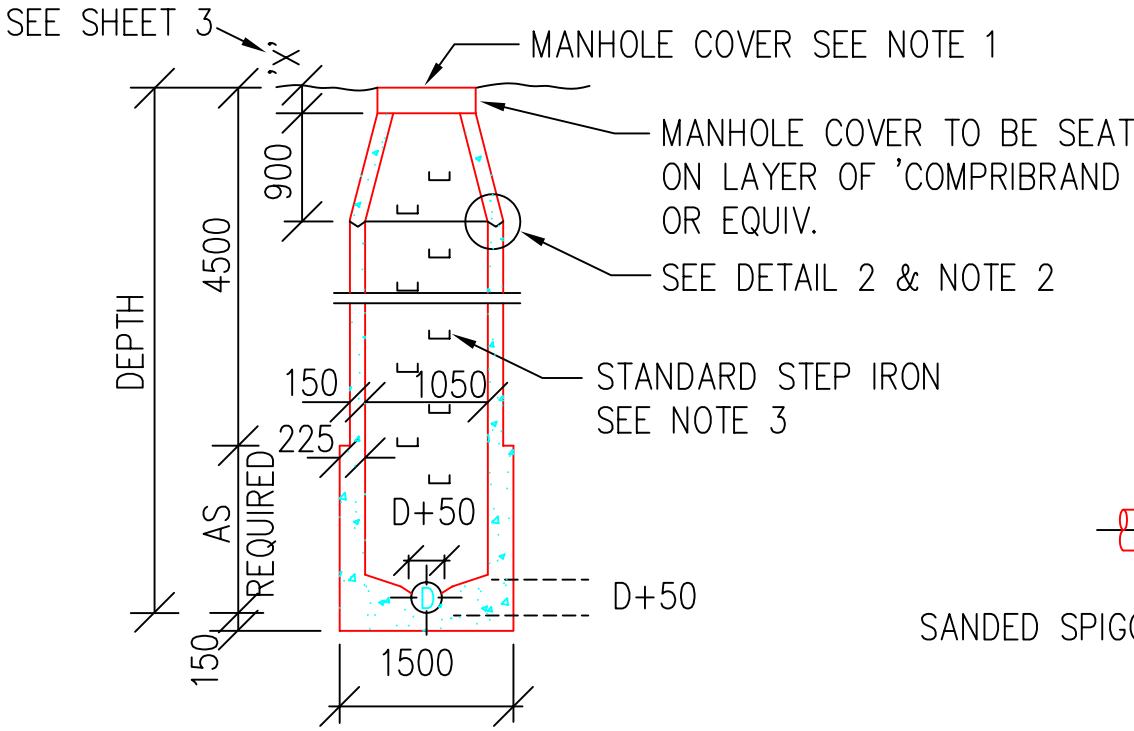

MANHOLE TYPE 1
FOR GREATER THAN 4500

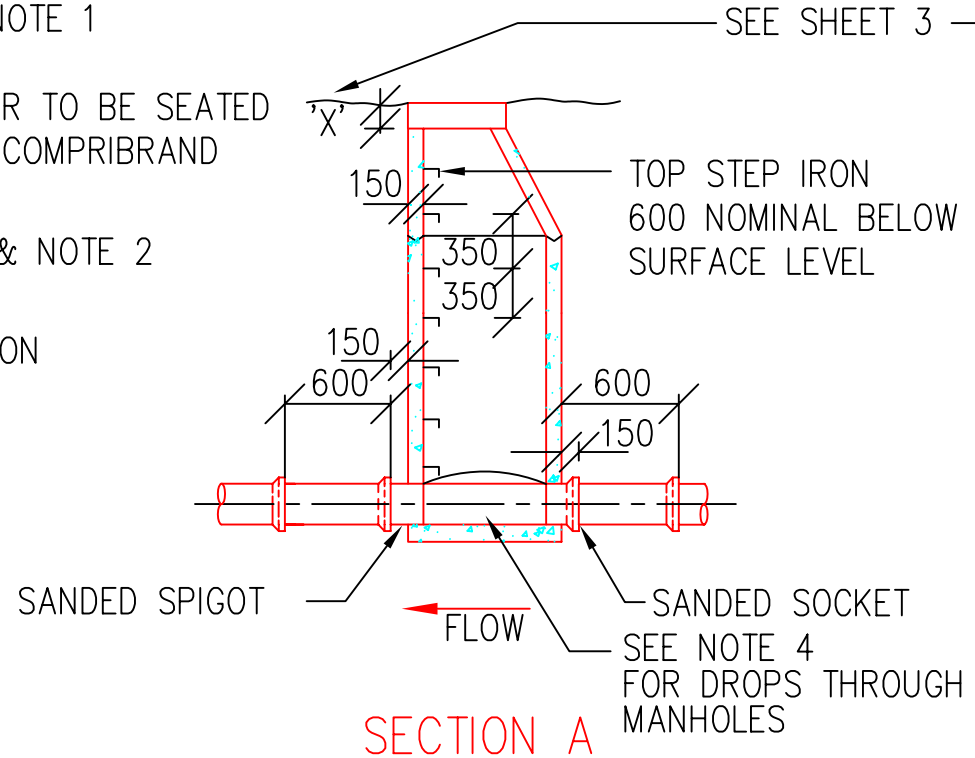

SECTION A
THROUGH MANHOLE

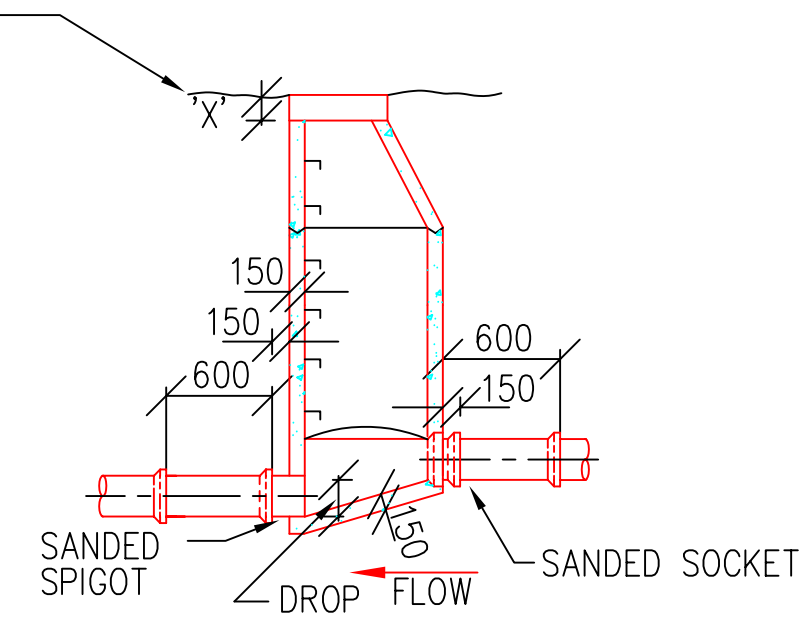

SEE BELOW TABLE & REFER TO NOTE 4

INLET PIPE SIZE	DROP THROUGH mm
150	90 TO 300
225 300	90 TO 300
375 450	90 TO 400
525 600	90 TO 400

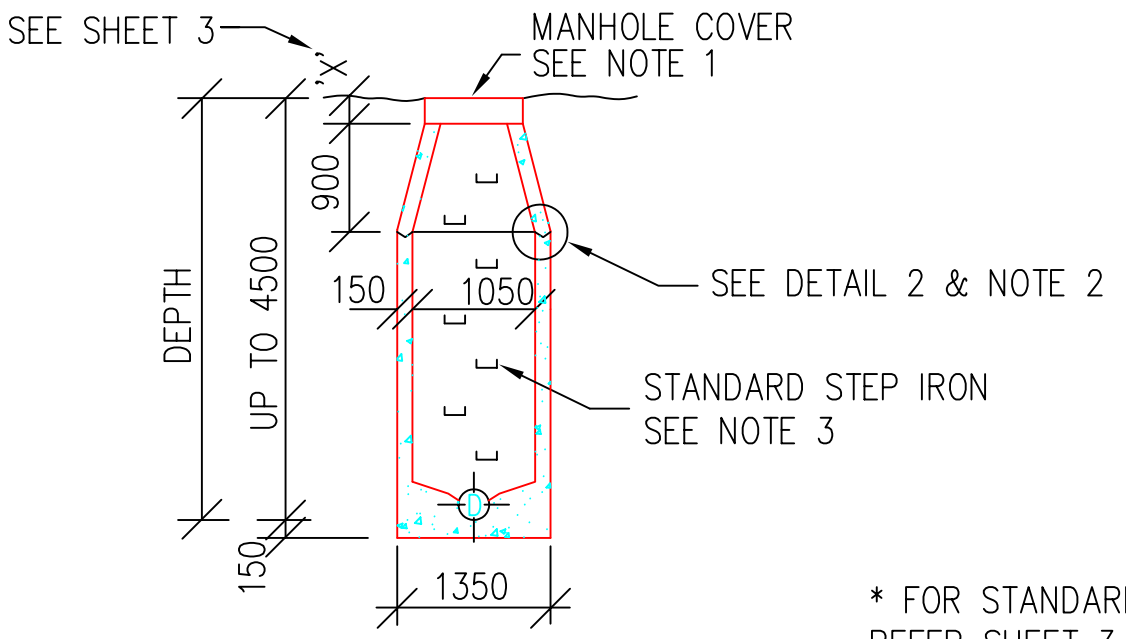

MANHOLE TYPE 2
FOR DEPTHS UP TO 4500

* FOR STANDARD NOTES REFER SHEET 3

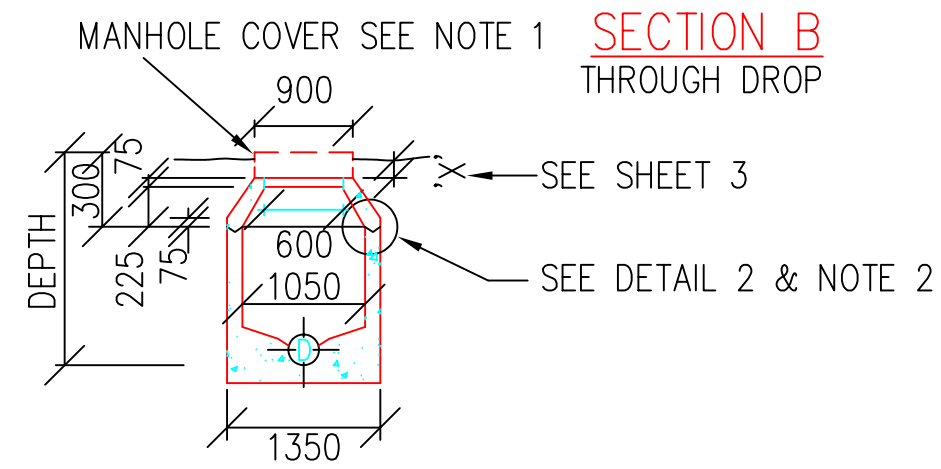

SECTION B
THROUGH DROP

MANHOLE TYPE 3
USE WHERE LESS THAN 1200 COVER OVER INLET PIPE & LESS THAN 1400 COVER OVER OUTLET PIPE

SNOWY RIVER SHIRE COUNCIL			MANHOLE					
Surveyed By	Drawn By	Scale	Approved By	Date	Datum	Sheet No	Ref. No	Plan No
Job No	Checked By	N.T.S.				1of3		SD33a
Disk No	Passed By							